Instruction Manual (Appendix)

SRC Sanitary Remote-Controlled Two-Step / Three-Position Valve

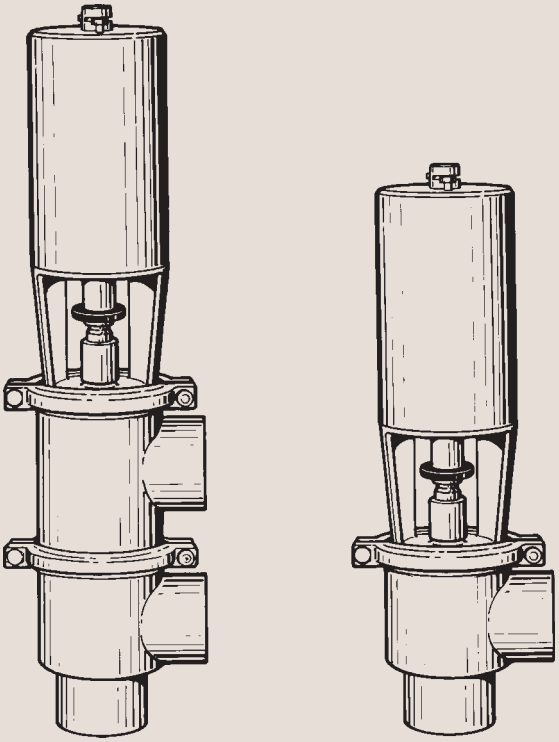

NOTE!
This is an appendix to instruction manual IM70007 for SRC standard sanitary remote-controlled valve.
The appendix must be used in connection with IM70007 to ensure correct installation, operation and maintenance of the valve.
Non-specified information is identical with the data for the standard SRC valve.

IM70725-GB3 1994-12

Declaration of Conformity

The designating company

Alfa Laval
Company Name

6000 Kolding
Address

+45 79 32 22 00
Phone No.

hereby declare that

Sanitary Remote-Controlled Two-step/Three Position Valve	**SRC-TS**	
Denomination	Type	Year

Was manufactured in conformity with the provisions in the COUNCIL DIRECTIVE of 14 June 1989 on mutual approximation of the laws of the Member States on the safety of machines (89/392/EEC as amended by directives 91/368/EEC and 93/44/EEC) with special reference to Annex 1 of the directive on essential safety and health requirements in relation to the construction and manufacture of machines.

Bjarne Søndergaard	**Vice President, R & D**
Name	Title
Alfa Laval	B. Søndergaard
Company	Signature

Designation

CE

Contents

Description
Dismantling and assembly
Parts list

Note:
All parts, with the exception for positions 30-40 in the parts list, are the same as for the standard SRC-valve

Three-position valve

The SRC valve is made in a double-piston version for three positions.
Apart from the two normal end positions an intermediate position can be obtained where all body end are open.

The valve has a fixed intermediate position and spring return to one of the end positions.

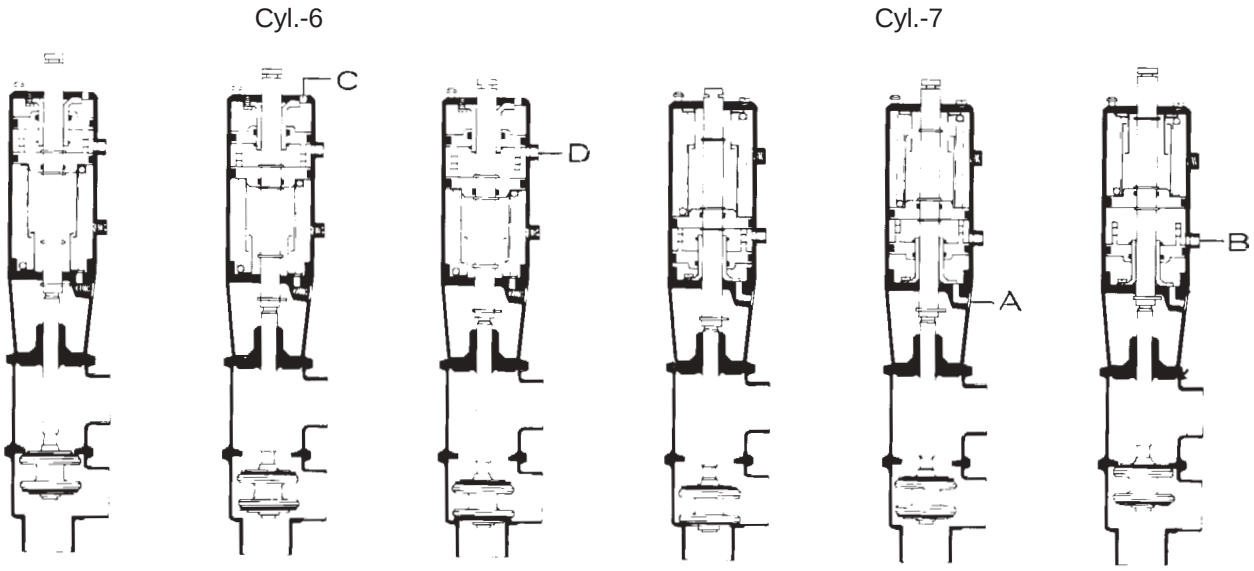

Spring return to upper position

Spring return to lower position

Operation

Actuator -7 (Spring return to lower position) is describe.

a) To intermediate position
- Supply compressed air to connection A.
- The lower piston is lifted up to the lock ring.
- The lower piston lifts the upper piston (the standard piston) the same distance. This corresponds to half the full stroke.
- The valve plug is then in a position half between the two valve seats.

b) Closing upwards
- Supply compressed air to connection B.
- The upper piston is lifted until the valve plug closes against the upper seat.
- The compressed air to connection A can now be released, but should remain on if intermediate position is required during the return stroke.

c) Closing upwards without intermediate position
- Supply compressed air directly to connection B.
  The valve then works as a standard SRC valve.

Actuator -6 (spring return to upper position) is operated in the same manner, but air connection C and D are used instead of A and B.

Two-step valve (metering valve) type TS

The valve is used for automatic two-step closing, e.g. in connection with filling of a vessel where an exact volume is required.

The only difference between the three-position valve and the two-step valve is that a spacer ring has been fitted on the guide between the piston and the lock ring in order to reduce the stroke for the intermediate position.

The degree of opening for the intermediate position can be adjusted by altering the height of the spacer ring. (See "PARTS LIST").

This valve is only made in valve body combination -20 (stop valve) and actuator combination -7 (spring return to lower position).

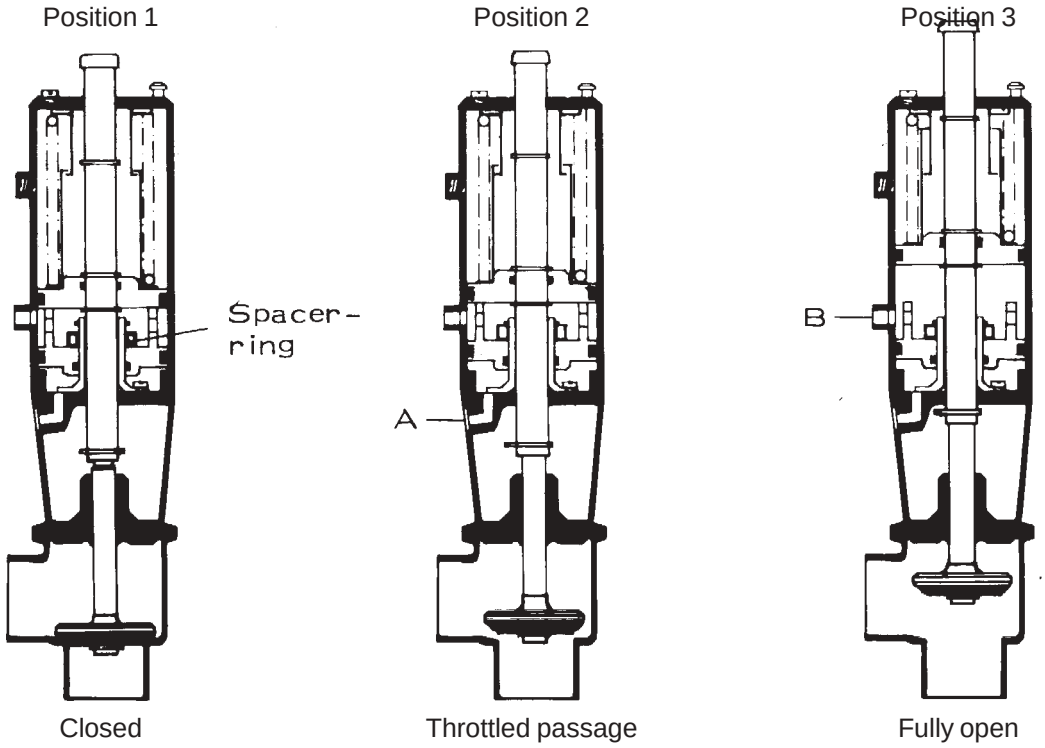

Operation

Position 1: The actuator is in position of rest. The valve is closed.

Position 2: Compressed air to connection A. The plug will open approx. 3 mm.
(The opening can be varied).

Position 3: Compressed air to connection B. The valve is fully open.

Three-position and two-step valves

Actuator -6
(Air pushes the piston down. Spring return).

Dismantling and assembly as for actuator -1* but with the following additions.

Dismantling

7 Remove lock ring 33 and pull out piston 34.

Bend a strong wire C, according to fig. and use it as a tool, should the piston be difficult to remove.

Be careful not to damage the O-rings on the piston when they pass the lock ring groove and the lock wire groove.

8. Remove screws 38 and then guide 32. Scrape off any remains of sealing compound both for guide and screw threads.

Assembly is carried out in reverse order.

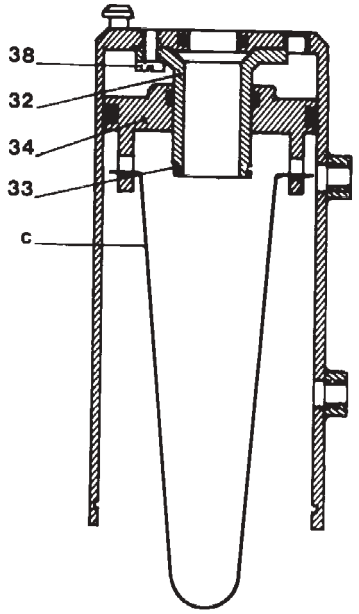

Actuator -7
(Air pushes the piston upwards. Spring return).

Dismantling and assembly as for actuator -2* and -6 with the exception that guide 32 and piston 34 are fitted on bonnet 37 and remain there when the cylinder is removed.

No tool is required when the guide is removed.

be careful not to damage the O-ring on the piston when it passes the lock ring groove on the guide.

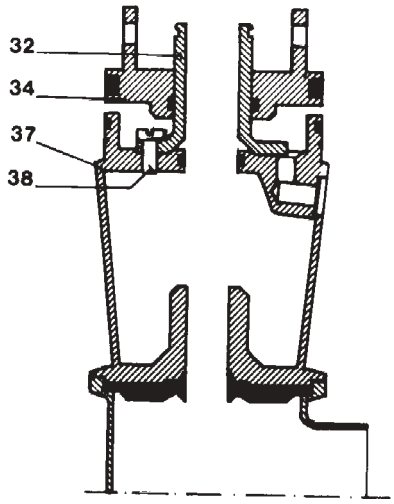

The position indicators for actuators -6 and -7 are the same as those for the standard SRC valves.

No signal is obtained for intermediate position. Indicators for the lower and throttled positions on the two-step valve should not be fitted.

* See instruction book for standard SRC-valve.

Exploded drawing

This page shows an exploded drawing of SRC, two-step/three-position valve.

The drawing includes all items of the valve. They are identical with the items in the Spare Parts List.

SRC, Two-step/three-position valve

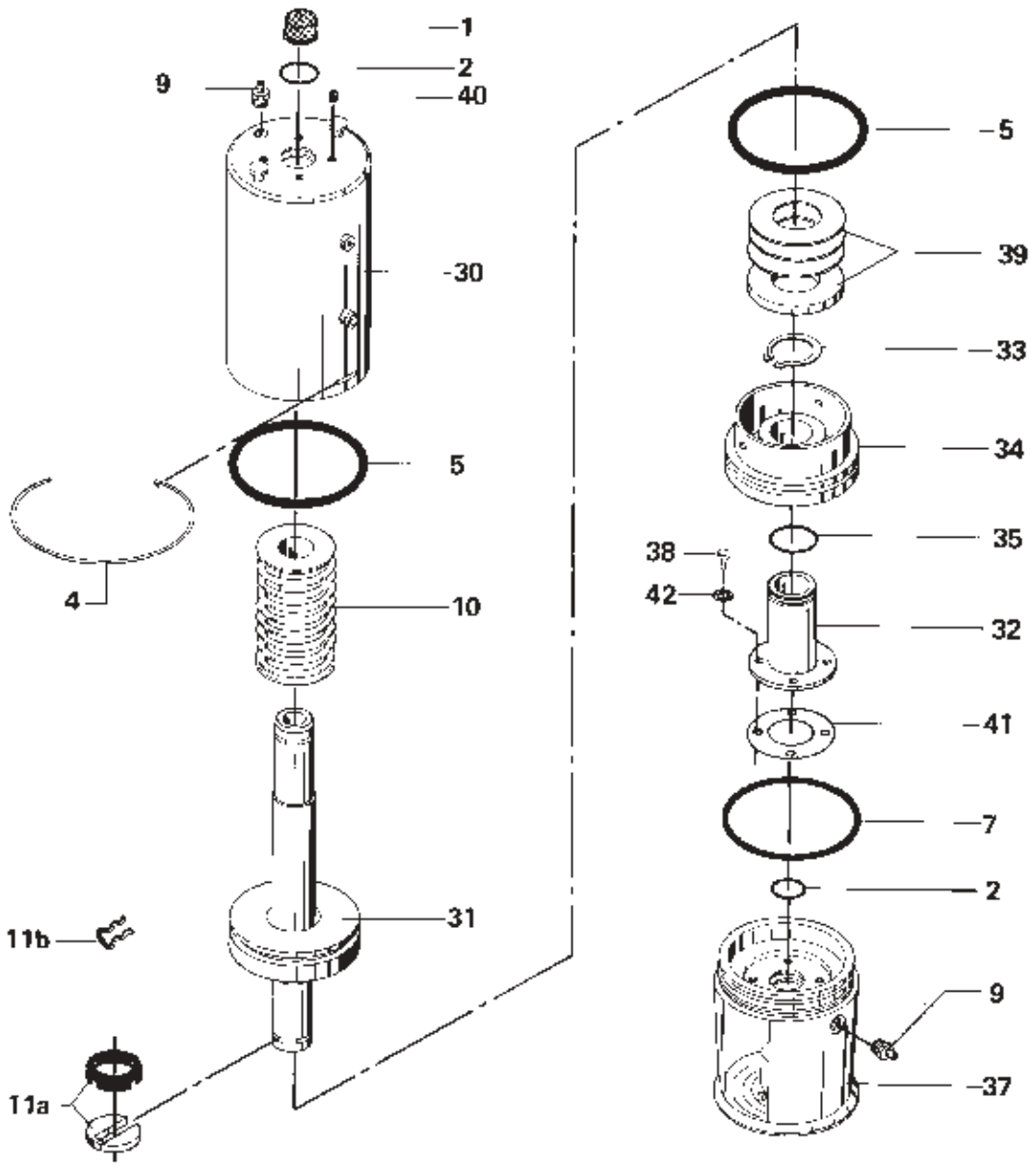

Parts list

Item	Qty.	Denomination
		Actuator
1	1	Cap
2[Δ]	2	O-ring
4[Δ]	1	Lock Wire
5[Δ]	2	O-ring
7[Δ]	1	O-ring
9	2	Plug
10	1	Spring assembly
11a[Δ]	1	Clip, compl. (period 84.08 -)
11b	1	Clip, (period 68.02 - 84.07)
30	1	Cylinder
31	1	Piston
32	1	Guide
33[Δ]	1	Lock ring
34	1	Piston for intermediate position
35[Δ]	1	O-ring
37	1	Bonnet
38	3-4*	Screw
39	1	Spacer ring
40	3-4*	Plastic screw
41[Δ]	1	Packing
42[Δ]	3-4*	Fibre washer

* .Quantity 4 is valid for 76-101,6 mm

[Δ] **service kits**

(See spare parts list)

How to contact Alfa Laval
Contact details for all countries
are continually updated on our website.
Please visit www.alfalaval.com to
access the information direct.